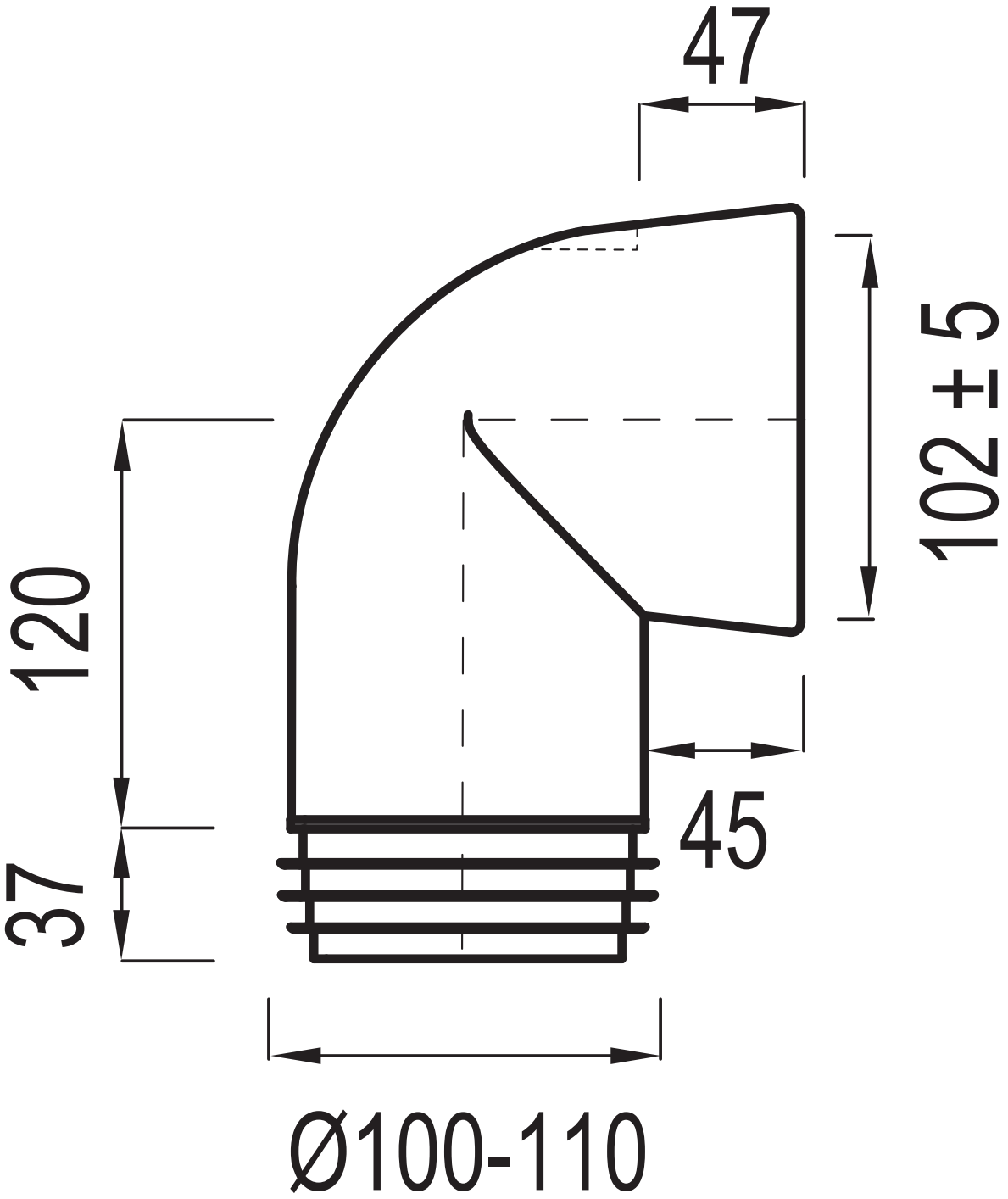
47
102 ± 5
120
45
37
Ø100-110