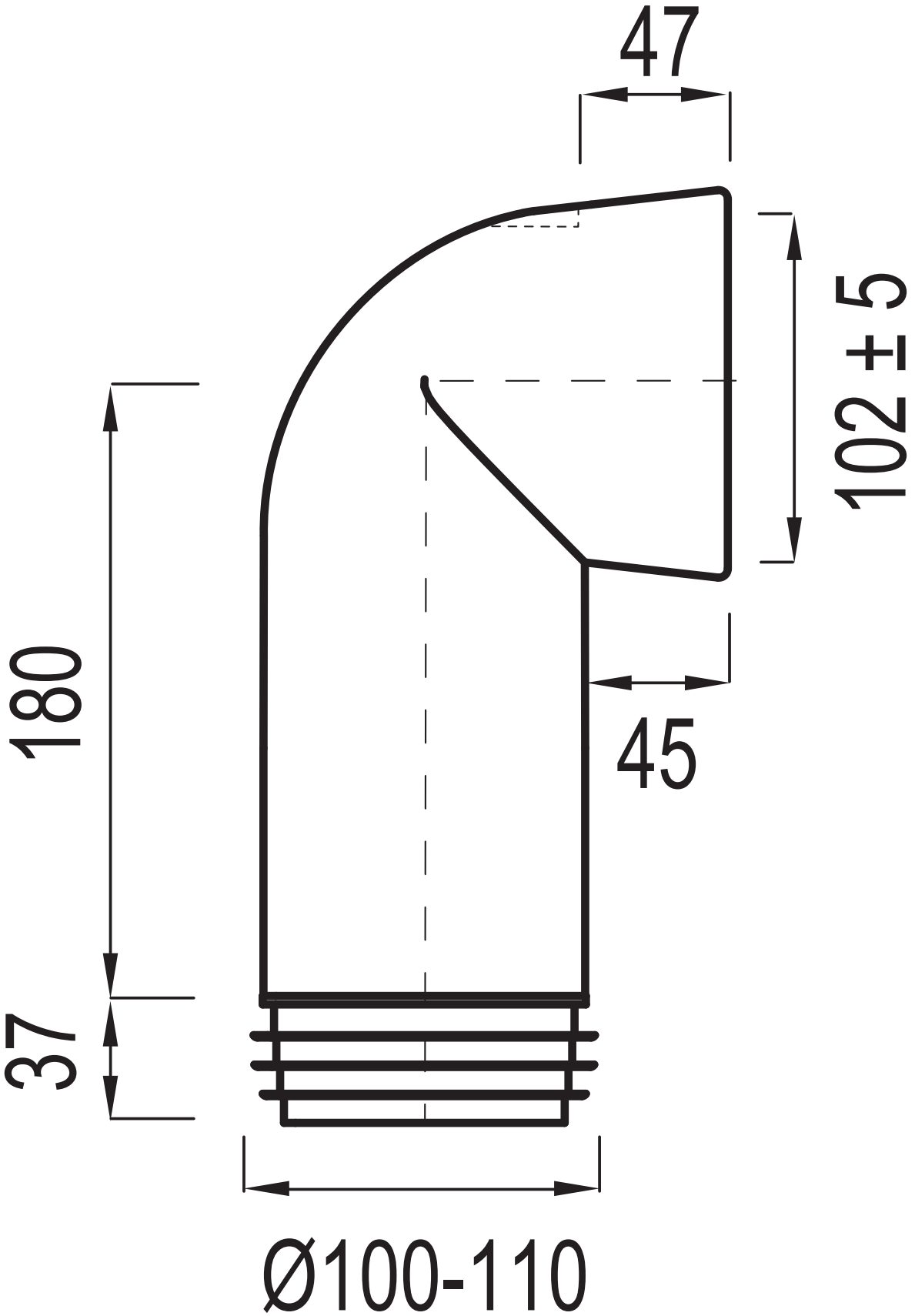
47
102 ± 5
180
45
37
Ø100-110